DV-1100

14/13/12th Gen. Intel® Core™ Series High Performance and Basic Function Rugged Embedded Computer

Overview

CONTACT

The DV-1100 is a compact, high-performance, embedded edge computer that supports 14/13/12th generation Intel® processors. Its balance between high-performance computing needs and cost-effectiveness enables enterprises to quickly analyze and process edge data for better decision-making and improved production efficiency and accuracy. The DV-1100 is ideal for smart manufacturing, machine vision, railway computing, and space-constrained applications where stability and reliability are paramount.

Key Features

- Intel® 14/13/12th Gen. Core™ i9/i7/i5/i3 Processors (max 65 W TDP)
- 1x M.2 Key M Type 2280 Socket for PCIe Gen 4x4 NVMe Storage
- 1x M.2 Key E Type 2230 Socket for Storage/Wireless/Bluetooth/Intel CNVi Module Expansion
- 1x M.2 Key B Type 3052/3042 Socket for 5G/Storage/GNSS/Add-on Card Expansion
- 1x M.2 Key B Type 2242 Socket for Storage/GNSS /Add-on Card Expansion
- Optional CMI & CFM Modules for I/O Expansion & Power Ignition Sensing Function
- Wide operating temperature -40°C to 70°C
- Safety Standard: UL, cUL, CB, IEC, EN 62368-1

Certifications

EN 50121-3-2 | EN 61000-6-2 | EN 61000-6-4 | MIL-STD-810H | EN 62368-1 | c UL us LISTED | CB | E13

Balancing Performance and Cost

The DV-1100 has a compact body and supports a 14/13/12th generation Intel® Core™ processor. It provides sufficient computing performance for multitasking and diverse applications while balancing performance and cost.

14 / 13 / 12th Gen

Intel Core Series

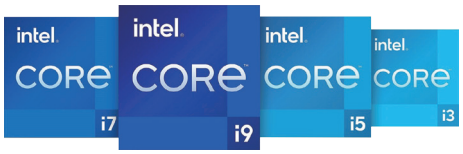

Compact Size

The DV-1100 measures only 224.1 x 162 x 62mm, making it easy to install anywhere, including in space-constrained applications.

Stunning Transfer and Access Speeds

The DV-1100 has high-speed I/O interfaces, including 2.5G LAN and 10Gbps USB 3.2 Gen2x1. Storage support includes 2.5" HDD/SSD and high-speed NVMe SSD.

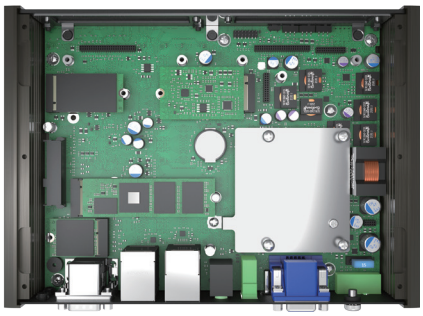

Excellent Extension Design

The DV-1100 has built-in M.2 Key B, M.2 Key E, and M.2 Key M slots for flexible wireless (5G, Wi-Fi, GNSS) and storage selection according to application requirements.

Various Industry Certifications

The DV-1100's rugged design meets various industrial-grade and industrial certifications, such as EMC standards in industrial environments (EN 61000-6-2/4), US military shock vibration standards (MIL-STD-810H), railway computing EN50155 (EN 50121-3-2 only), and more.

Specifications

Model Name	DV-1100
System	
Processor	▪ 14th Generation Intel® Raptor Lake-S Refresh Series P-Core Only CPU: - Intel® Core™ i9-14901E 8 Cores Up to 5.6 GHz, TDP 65W - Intel® Core™ i7-14701E 8 Cores Up to 5.4 GHz, TDP 65W - Intel® Core™ i5-14501E 6 Cores Up to 5.2 GHz, TDP 65W - Intel® Core™ i5-14401E 6 Cores Up to 4.7 GHz, TDP 65W - Intel® Core™ i3-14100 4 Cores Up to 4.7 GHz, TDP 60W - Intel® Core™ i9-14901TE 8 Cores Up to 5.5 GHz, TDP 45W - Intel® Core™ i7-14701TE 8 Cores Up to 5.2 GHz, TDP 45W - Intel® Core™ i5-14501TE 6 Cores Up to 5.1 GHz, TDP 45W - Intel® Core™ i5-14401TE 6 Cores Up to 4.5 GHz, TDP 45W - Intel® Core™ i3-14100T 4 Cores Up to 4.4 GHz, TDP 35W - Intel® Processor 300 2 Cores Up to 3.9 GHz, TDP 46W - Intel® Processor 300T 2 Cores Up to 3.4 GHz, TDP 35W ▪ 14th Generation Intel® Raptor Lake-S Refresh Series Hybrid CPU: - Intel® Core™ i9-14900 24 Cores Up to 5.8 GHz, TDP 65W - Intel® Core™ i7-14700 20 Cores Up to 5.4 GHz, TDP 65W - Intel® Core™ i5-14500 14 Cores Up to 5.0 GHz, TDP 65W - Intel® Core™ i5-14400 10 Cores Up to 4.7 GHz, TDP 65W - Intel® Core™ i9-14900T 24 Cores Up to 5.5 GHz, TDP 35W - Intel® Core™ i7-14700T 20 Cores Up to 5.2 GHz, TDP 35W - Intel® Core™ i5-14500T 14 Cores Up to 4.8 GHz, TDP 35W - Intel® Core™ i5-14400T 10 Cores Up to 4.5 GHz, TDP 35W ▪ 13th Generation Intel® Raptor Lake-S Series P-Core Only CPU: - Intel® Core™ i3-13100E 4 Cores Up to 4.4 GHz, TDP 60W - Intel® Core™ i3-13100 4 Cores Up to 4.5 GHz, TDP 60W - Intel® Core™ i3-13100TE 4 Cores Up to 4.1 GHz, TDP 35W - Intel® Core™ i3-13100T 4 Cores Up to 4.2 GHz, TDP 35W ▪ 13th Generation Intel® Raptor Lake-S Series Hybrid CPU: - Intel® Core™ i9-13900E 24 Cores Up to 5.2 GHz, TDP 65W - Intel® Core™ i9-13900 24 Cores Up to 5.6 GHz, TDP 65W - Intel® Core™ i7-13700E 16 Cores Up to 5.1 GHz, TDP 65W - Intel® Core™ i7-13700 16 Cores Up to 5.2 GHz, TDP 65W - Intel® Core™ i5-13500E 14 Cores Up to 4.6 GHz, TDP 65W - Intel® Core™ i5-13400E 10 Cores Up to 4.6 GHz, TDP 65W - Intel® Core™ i5-13500 14 Cores Up to 4.8 GHz, TDP 65W - Intel® Core™ i5-13400 10 Cores Up to 4.6 GHz, TDP 65W - Intel® Core™ i9-13900TE 24 Cores Up to 5.0 GHz, TDP 35W - Intel® Core™ i7-13700TE 16 Cores Up to 4.8 GHz, TDP 35W - Intel® Core™ i7-13700T 16 Cores Up to 4.9 GHz, TDP 35W - Intel® Core™ i5-13500TE 14 Cores Up to 4.5 GHz, TDP 35W - Intel® Core™ i5-13500T 14 Cores Up to 4.6 GHz, TDP 35W ▪ 12th Generation Intel® Alder Lake-S Series P-Core Only CPU: - Intel® Core™ i5-12500E 6 Cores Up to 4.5 GHz, TDP 65W - Intel® Core™ i5-12500 6 Cores Up to 4.6 GHz, TDP 65W - Intel® Core™ i5-12400 6 Cores Up to 4.4 GHz, TDP 65W - Intel® Core™ i3-12100E 4 Cores Up to 4.2 GHz, TDP 60W - Intel® Core™ i3-12100 4 Cores Up to 4.3 GHz, TDP 60W - Intel® Core™ i5-12500TE 6 Cores Up to 4.3 GHz, TDP 35W - Intel® Core™ i3-12100TE 4 Cores Up to 4.0 GHz, TDP 35W - Intel® Pentium® G7400E 2 Cores Up to 3.6 GHz, TDP 46W - Intel® Pentium® G7400TE 2 Cores Up to 3.0 GHz, TDP 35W - Intel® Celeron® G6900E 2 Cores Up to 3.0 GHz, TDP 46W - Intel® Celeron® G6900TE 2 Cores Up to 2.4 GHz, TDP 35W - Intel® Pentium® G7400 2 Cores Up to 3.7 GHz, TDP 46W - Intel® Pentium® G7400T 2 Cores Up to 3.1 GHz, TDP 35W - Intel® Celeron® G6900 2 Cores Up to 3.4 GHz, TDP 46W - Intel® Celeron® G6900T 2 Cores Up to 2.8 GHz, TDP 35W ▪ 12th Generation Intel® Alder Lake-S Series Hybrid CPU: - Intel® Core™ i9-12900E 16 Cores Up to 5 GHz, TDP 65W - Intel® Core™ i9-12900 16 Cores Up to 5.1 GHz, TDP 65W - Intel® Core™ i7-12700E 12 Cores Up to 4.8 GHz, TDP 65W - Intel® Core™ i7-12700 12 Cores Up to 4.9 GHz, TDP 65W - Intel® Core™ i9-12900TE 16 Cores Up to 4.8 GHz, TDP 35W - Intel® Core™ i7-12700TE 12 Cores Up to 4.7 GHz, TDP 35W

Chipset	▪ Intel H610E Chipset
Memory	▪ 1x DDR5 SO-DIMM sockets, support Un-buffered and non-ECC Type memory, up to 48GB. - Core™ i9/i7: Support 5600/4800 MHz with Single Rank memory and 5200/4800 MHz with Dual Rank memory. - Core™ i5/i3/Pentium®/Celeron®/Intel® Processor: Support 4800 MHz.
BIOS	▪ AMI BIOS
Graphics	
Graphics Engine	▪ Integrated Intel® UHD Graphics 770: Core™ i9/i7/i5 ▪ Integrated Intel® UHD Graphics 730: Core™ i3 ▪ Integrated Intel® UHD Graphics 710: Pentium®/Celeron®
Maximum Display Output	▪ Supports Triple Independent Display
DP	▪ 1x DisplayPort Connector: 3840 x 2160 @60Hz
VGA	▪ 1x VGA Connector: 1920 x 1200 @60Hz
CMI Display	▪ 1x CMI Interface for Optional CMI-DP/CMI-HDMI® Module Expansion
Audio	
Audio Codec	▪ Realtek® ALC888, High Definition Audio
Line-out	▪ 1x Line-out, Phone Jack 3.5mm
Mic-in	▪ 1x Mic-in, Phone Jack 3.5mm
LAN	▪ 1x 2.5GbE LAN, RJ45 - Intel® I226 ▪ 1x 1GbE LAN, RJ45 - Intel® I219
COM	▪ 2x RS-232/422/485 with Auto Flow Control (Supports 5V/12V), DB9
USB	▪ 1x 10Gbps USB3.2 Gen 2x1, Type A ▪ 2x 5Gbps USB 3.2 Gen 1x1, Type A ▪ 3x 480Mbps USB2.0, Type A
Storage / Expansion	
I/O Storage	▪ 1x 2.5" SATA HDD/SSD Bay (SATA 3.0)
M.2 Key B Socket	▪ 1x M.2 Key B Type 3042/3052 Socket (PCIe Gen 3x2 / USB3.2 Gen2 x1 / SATA), Support 5G/GNSS/Storage/Add-on Card Expansion ▪ 1x M.2 Key B Type 3042 (PCIe Gen 3x2 / USB2.0), Support Storage/Add-on Card Expansion
M.2 Key E Socket	▪ 1x M.2 Key E Type 2230 Socket (PCIe Gen 3x2 / USB2.0), Support Storage/Wireless/Bluetooth/Intel CNVi Module Expansion
M.2 Key M Socket	▪ 1x M.2 Key M Type 2280 Socket (PCIe Gen 4x4 / SATA), Support Storage/Add-on Card Expansion
SIM Socket	▪ 1 x Front Accessible Dual Nano SIM Socket
CMI (Combined Multiple I/O) Interface	▪ 1x CMI Interface for optional CMI-Display Module Expansion ▪ 2x CMI Interface for optional CMI-COM/DIO Module Expansion
CFM (Control Function Module) Interface	▪ 1x CFM IGN Interface for optional CFM-IGN Module Expansion
Other Function	
External FAN Connector	▪ 1x External FAN Connector, 4-pin Terminal Block (Support Smart Fan by BIOS)
Clear CMOS Switch	▪ 1x Clear CMOS Switch
Reset Button	▪ 1x Reset Button
Watchdog Timer	▪ Software Programmable Supports 256 Levels System Reset
Antenna Hole	▪ 5x Antenna Holes

Power	
Power Button	▪ 1x ATX Power On/Off Button
Power Mode Switch	▪ 1x AT/ATX Mode Switch
Power Input	▪ 9 - 48VDC, 3-pin Terminal Block
Remote Power On/Off	▪ 1x Remote Power On/Off, 2-pin Terminal Block
Remote Power LED	▪ 1x Remote Power LED, 2-pin Terminal Block
Max. Power Consumption	▪ 35W CPU: 204.46W ▪ 65W CPU: 307.92W - Test conducted with CPU, 1x RAM, and 1x storage - 100% load during burn-in testing
Inrush Current (Peak)	▪ 35W CPU: 4.362 A@24V ▪ 65W CPU: 4.516 A@24V
Physical	
Dimension (W x D x H)	▪ 224.1 x 162 x 62 mm
Weight Information	▪ 2.52 KG
Mechanical Construction	▪ Extruded Aluminum with Heavy Duty Metal
Mounting	▪ Wall / DIN-RAIL / VESA Mount
Physical Design	▪ Fanless Design ▪ Cableess Design ▪ Jumper-less Design ▪ Unibody Design
Reliability & Protection	
Reverse Power Input Protection	▪ Yes
Over Voltage Protection	▪ Protection Range: 51~58V ▪ Protection Type: shut down operating voltage, re-power on at the preset level to recover
Over Current Protection	▪ 15A
CMOS Battery Backup	▪ SuperCap Integrated for CMOS Battery Maintenance-free Operation
MTBF	▪ 413,236 Hours - Database: Telcordia SR-332 Issue3, Method 1, Case 3
Operating System	
Windows	▪ Windows®11, Windows®10
Linux	▪ Ubuntu Desktop 22.04 LTS
Environment	
Operating Temperature	▪ 35W TDP Processor: -40°C to 70°C ▪ 45W TDP Processor: -40°C to 60°C (With External Fan Kit) ▪ 65W TDP Processor: -40°C to 55°C (With External Fan Kit) * PassMark BurnInTest: 100% CPU, 2D/3D Graphics (without thermal throttling) * With extended temperature peripherals; Ambient with air flow * According to IEC60068-2-1, IEC60068-2-2, IEC60068-2-14
Storage Temperature	▪ -40°C to 85°C
Relative Humidity	▪ 95% RH @ 70°C (Non-condensing)
Shock	▪ MIL-STD-810H
Vibration	▪ MIL-STD-810H

EMC	▪ CE, UKCA, FCC, ICES-003 Class A ▪ EN IEC 61000-6-4 / EN IEC 61000-6-2 (24VDC Input Only) ▪ EN 50155 (EN 50121-3-2 Only) ▪ E-mark
EMI	▪ CISPR 32 Conducted & Radiated: Class A ▪ EN/BS EN 50121-3-2 Conducted & Radiated: Class A ▪ EN/BS EN IEC 61000-3-2 Harmonic current emissions: Class A ▪ EN/BS EN 61000-3-3 Voltage fluctuations & flicker ▪ FCC 47 CFR Part 15B, ICES-003 Conducted & Radiated: Class A
EMS	▪ EN/IEC 61000-4-2 ESD: Contact: 6 kV; Air: 8 kV ▪ EN/IEC 61000-4-3 RS: 80 MHz to 1000 MHz: 20 V/m ▪ EN/IEC 61000-4-4 EFT: AC Power: 2 kV; DC Power: 2 kV; Signal: 2 kV ▪ EN/IEC 61000-4-5 Surges: AC Power: 2 kV; Signal: 1 kV ▪ EN/IEC 61000-4-6 CS: 10V (**Compliant with the standard when utilizing shielded cable.) ▪ EN/IEC 61000-4-8 PFMF: 50 Hz, 30A ▪ EN/IEC 61000-4-11 Voltage Dips & Voltage Interruptions: 1 cycles at 60 Hz
Safety	▪ UL, cUL, CB, IEC, EN 62368-1

The terms HDMI, HDMI High-Definition Multimedia Interface, HDMI Trade dress and the HDMI Logos are trademarks or registered trademarks of HDMI Licensing Administrator, Inc.

External Layout

Front

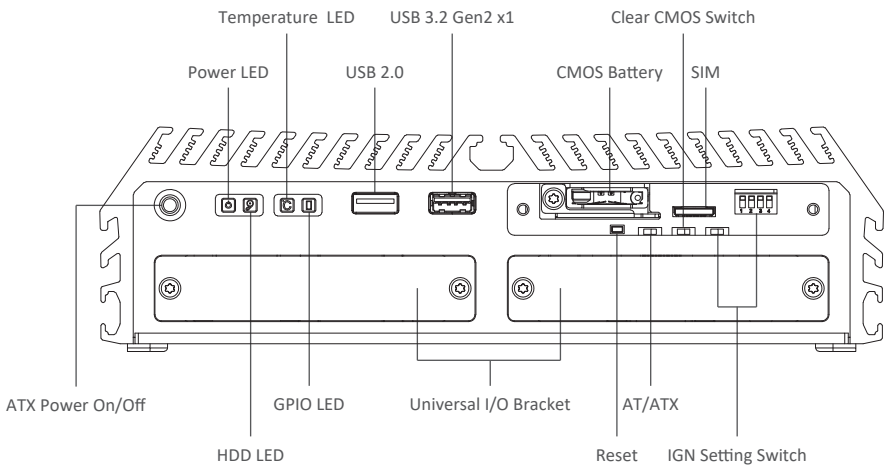

Rear

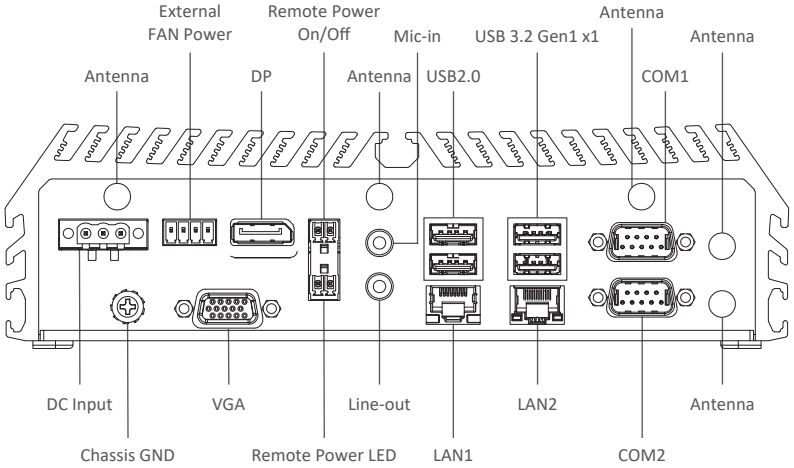

Dimensions

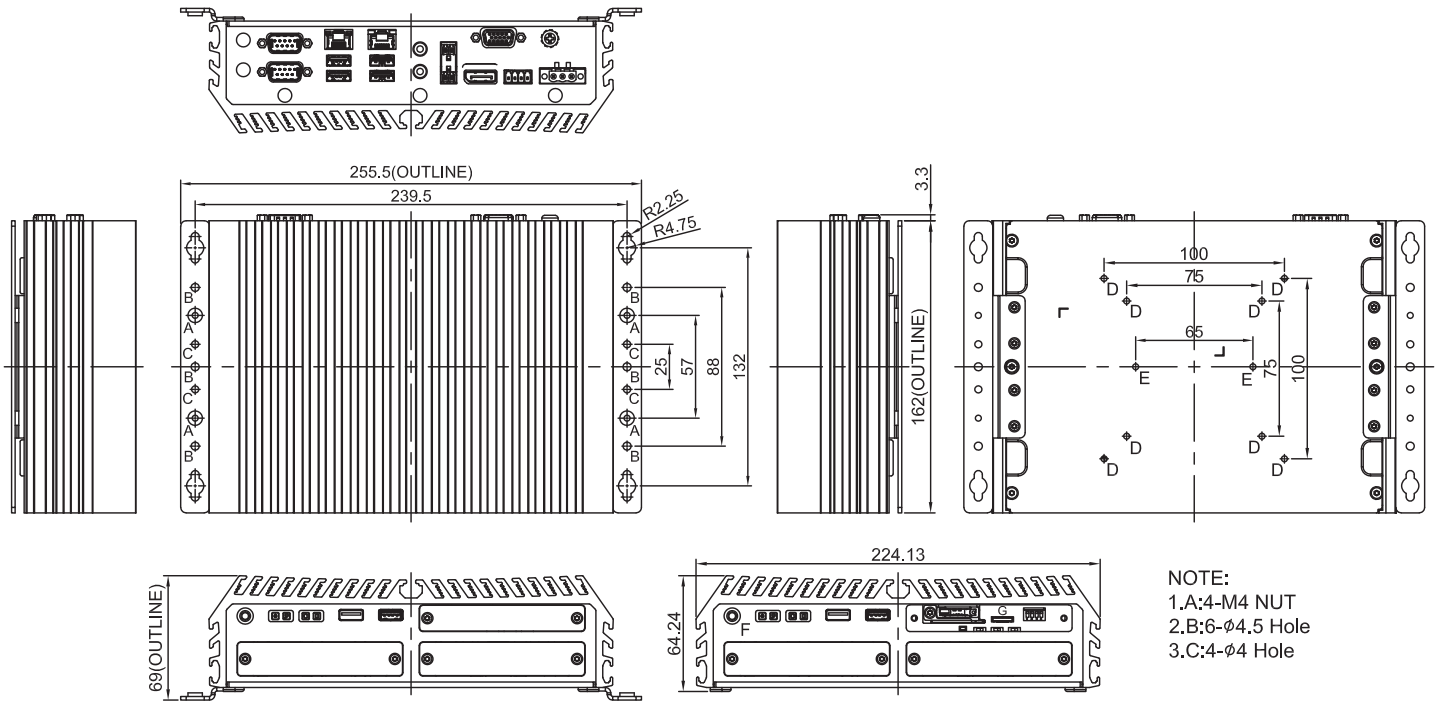

NOTE:
1.A:4-M4 NUT
2.B:6-Φ4.5 Hole
3.C:4-Φ4 Hole

Unit: mm

Ordering Information

Available Models

Model No.	Description
DV-1100-R10	14/13/12th Gen. Intel® Core™ Series High Performance and Basic Function Rugged Embedded Computer

Package Checklist

▪ DV-1100 Embedded Computer x1	▪ Wall Mounting Kit x1
▪ CPU Installation Kit x1	▪ Power Terminal Block Connector x 1
▪ External Fan Terminal Block Connector x 1	▪ Remote Function Terminal Block Connector x 2
▪ Screw Pack x 1	▪ M.2 Key B Type 3052 to Type 3042 Adapter Bracket x1

Optional Modules and Accessories

Model No.	Description
CMI-DP01-R10	CMI Module with 1x DisplayPort
CMI-HD03-R10	CMI Module with 1x HDMI® Port
CMI-COM06-R10	CMI Module with 2x RS232/422/485 Ports (Support 5V/12V)
CMI-DIO06-R10	CMI Module with 16DIO (8in 8out)
CFM-IGN04-R10	CFM Module with Power Ignition Sensing Function, 12V/24V Selectable
UB1603-R10	Universal Bracket with 2x DB9 Cutout
UB1606-R10	Universal Bracket with DP Cutout
UB1608-R10	Universal Bracket with HDMI® Cutout
UB1611-R10	Universal Bracket with 2x RJ45 Cutout
UB1618-R20	Universal Bracket with DIO Cutout
UB1633-R10	Universal Bracket with 2x USB Type C Cutout for MEC-USB (M.2 interface) Expansion
UB1634-R10	Universal Bracket with 2x USB Type A Cutout for MEC-USB (M.2 interface) Expansion
DINRAIL-R10	Diamond series DIN-RAIL Mount Kit
FAN-EX104	External Fan with 4pin Terminal Block Plug and Mounting Bracket, Support Smart Fan
GST220A24-CIN	Adapter AC/DC 24V 9.2A 220W with 3pin Terminal Block Plug and Tubes, Level VI
GST360A24-CIN	Adapter AC/DC 24V 15A 360W with 3pin Terminal Block Plug and TUBES, Level VI
RSD-200D-24	Railway Single Output DC-DC Converter 200W / DC 24V
MEC-LAN-2002i	M.2 2242/2260/2280 (B+M key) 2-port 10/100/1000 isolated Ethernet board, 2x RJ45 Connector
MEC-CAN-2812i	M.2 2242/2260/2280 (B+M key) dual isolated CAN bus 2.0B board, 2x DB9 Connector
MEC-CAN-2814i	M.2 2242/2260/2280 (B+M key) quad isolated CAN bus 2.0B board, 4x DB9 Connector
MEC-COM-2032i	M.2 2242/2260/2280 (B+M key) 2-port RS-232/422/485 isolated serial board, 2x DB9 Connector
MEC-USB-2002C	M.2 2242/2260/2280 (B+M key) 2-port USB 3.2 board(0°C~+70°C), 2x USB Type C Connector, Cervoz
MEC-USB-2002-SP	M.2 2242/2260/2280 2 port USB 3.2 board(-0°C~+70°C), w/ IDE 20P 90° Cable, 2x USB Type A Connector, Cervoz

Optional Module Configuration

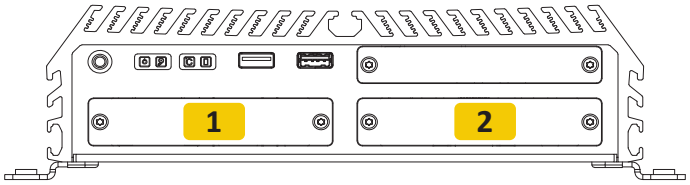

Model No.	Description	1	2
CMI-DP01/UB1606	CMI Module with 1x DisplayPort / 1x Universal Bracket with DP Cutout for DV Series	-	V
CMI-HD03/UB1608	CMI Module with 1x HDMI® / 1x Universal Bracket with HDMI® Cutout for DV Series	-	V
CMI-COM06/UB1603	CMI Module with 2x RS232/422/485 Ports (Support 5V/12V) / 1x Universal Bracket with 2x DB9 Cutout for DV Series	V	V
CMI-DIO06/UB1618	CMI Module with 16DIO (8in 8out) / 1x Universal Bracket with DIO Cutout for DV Series	V	V
MEC-LAN-2002i/UB1611	M.2 Module with 2x 10/100/1000 isolated Ethernet board and 2x RJ45 Connector / 1x Universal Bracket with 2x RJ45 Cutout for DV Series	V	V
MEC-CAN-2812i/UB1603	M.2 Module with 2x isolated CAN bus 2.0B board and 2x DB9 Connector/ 1x Universal Bracket with 2x DB9 Cutout for DV Series	V	V
MEC-CAN-2814i/UB1603 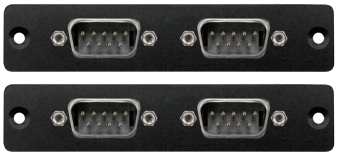	M.2 Module with 4x isolated CAN bus 2.0B board and 4x DB9 Connector / 2x Universal Bracket with 2x DB9 Cutout for DV Series	V	
MEC-COM-2032i/UB1603	M.2 Module with 2x RS-232/422/485 Ports isolated serial board and 2x DB9 Connector / 1x Universal Bracket with 2x DB9 Cutout for DV Series	V	V
MEC-USB-2002C/UB1633-R10	M.2 Module with 2x USB 3.2 Type C Port / Universal Bracket with 2x USB Type C Cutout for MEC-USB (M.2 interface) Expansion	V	-
MEC-USB-2002-SP/UB1634-R10 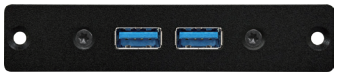	M.2 Module with 2x USB 3.2 Type A Port / Universal Bracket with 2x USB Type A Cutout for MEC-USB (M.2 interface) Expansion	V	-

V : Compatible

Updated: Sep. 30, 2026.

© Cincoze Co., Ltd. All Rights Reserved. Specifications subject to change without notice.
All product names, logos, and brands are the property of their respective owners. All company, product and service names used in this document are for identification purposes only. The use of these names, logos, and brands does not imply endorsement.