CFM-PoE04

CFM Module with PoE Function, Individual Port 25.5W

- CFM (Control Function Module) Technology
- Enable Power Over Ethernet Plus Function for LAN Port
- IEEE 802.3at Compliant
- Individual Port Support Up to 25.5W

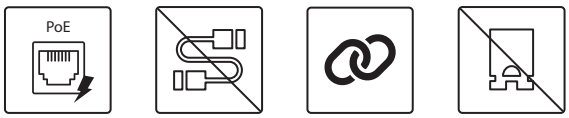

Specifications

Interface	▪ CFM (Control Function Module) Interface
Function	▪ 2x Power over Ethernet Plus Ports (PoE+)
Power over Ethernet Standard	▪ IEEE 802.3at Compliant
Power Output	▪ Individual port 25.5W
Power Boost	▪ 50 ~ 57V
Dimension(W x D x H)	▪ 50 x 35 x 11 mm (With Heatsink)

Dimensions

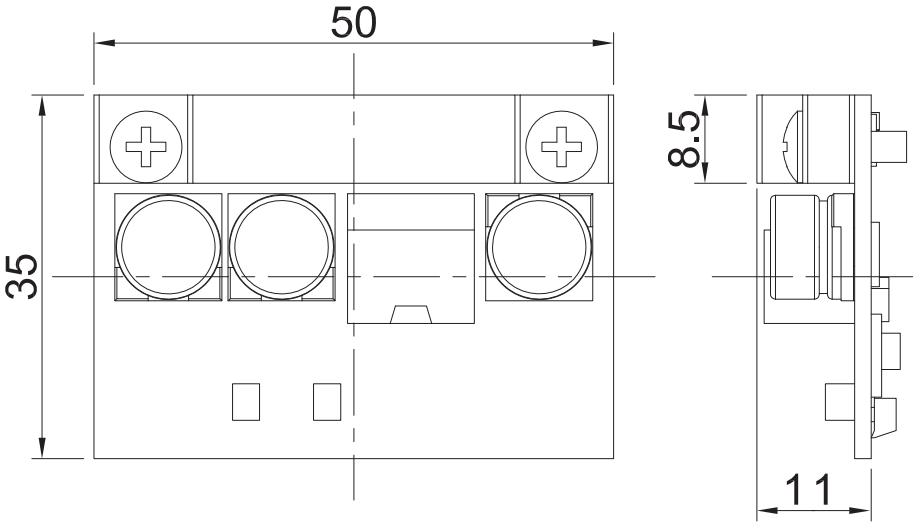

Unit: mm

Ordering Information

Available Models

Model No.	Description
CFM-PoE04-R11	CFM Module with PoE Control Function, Individual Port 25.5W

Package Checklist

- Control Function Module x1
- Heatsink x1
- Thermal Pad Pack x1
- Screw Pack x1

Compatible List

Product Series	Product Model
P2000 Series	P2202 P2102

Updated: Apr. 30, 2025.

© Cincoze Co., Ltd. All Rights Reserved. Specifications subject to change without notice.
All product names, logos, and brands are the property of their respective owners. All company, product and service names used in this document are for identification purposes only. The use of these names, logos, and brands does not imply endorsement.